FROST TECH REFRIGERATION LTD.

MDS-SD

STRAIGHT FRONT GLASS SALAD DISPLAY CASE

DESCRIPTION OF STANDARD UNIT:

- Forced cooling
- LED Market lighting.
- Construction of powder-coated steel
- ABS sides
- Front made of powder-coated steel
- Chrome bumper
- Stainless steel worktop
- Stainless steel storage chamber (except corners)
- Heater under evaporator (except corners)
- Heated Aluminum glass profile
- Temp. range* (G): 0 ÷ +4 °C
- Front opening glass
- Automatic water Evaporation
- Digital temperature control

OPTIONS:

- For external condensing unit
- Fish version (FISH)
- Salad Display Table (HW-SD) temp. range*: 0 ÷ +4 °C
- Hot version (HW-H) - temp. range*:+40 ÷ +90 °C
- Self-service version, forced cooling temp. range*: 0 ÷ +4 °C
- Glass shelf
- Separators: movable or stabile
- Stainless steel shelf for customer
- Two levels exposition trays
- Wheels
- Multiplexing
- Stand for scales, cash registers
- Granite worktop
- Lift up system of front glass

SPECIFICATIONS

MODEL	LENGTH	DEPTH	HEIGHT	WEIGHT (LBS / KG)	ELECTRICAL
MDS3-SD	42 ½”	45 ⅛”	49 ¼”	319 / 145	115V / 60Hz / 1ph / 6 AMP
MDS4-SD	52 ¼”	45 ⅛”	49 ¼”	375 / 170	115V / 60Hz / 1ph / 6 AMP
MDS5-SD	62 ⅛”	45 ⅛”	49 ¼”	430 / 195	115V / 60Hz / 1ph / 8 AMP
MDS6-SD	81 ¾”	45 ⅛”	49 ¼”	507 / 230	115V / 60Hz / 1ph / 8 AMP
MDS8-SD	101 ½”	45 ⅛”	49 ¼”	683 / 310	115V / 60Hz / 1ph / 8 AMP
MDS10-SD	121 ¼”	45 ⅛”	49 ¼”	859 / 390	115V / 60Hz / 1ph / 10.5 AMP
MDS12-SD	150 ⅝”	45 ⅛”	49 ¼”	1036 / 470	115V / 60Hz / 1ph / 11 AMP

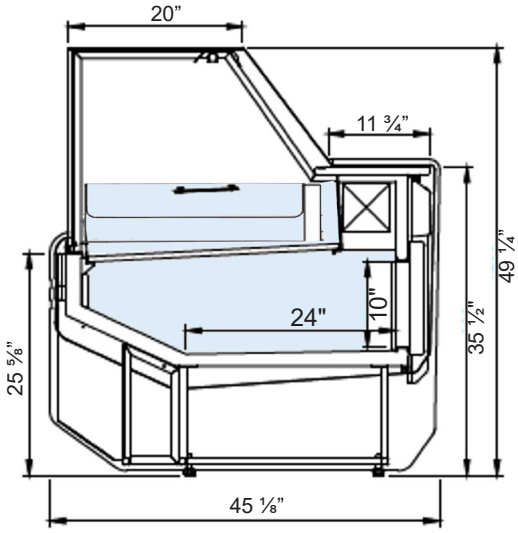

FORCED COOLING | R404a | 115V 220V 60Hz | AUTO | DIGITAL | PLUG IN | LED

* Temperature range given for max ambient temp of +30ºC and relative humidity of 55%.
** Cooling power demand: 400 W/1mr at evaporating temp. -10ºC (Hawana W); 350W/1mr at evaporating temp. -25ºC

Wood Stains

22-05 Burnat | Calvados | 22-66 Dark Nut | 23-63 Dark Teak | 22-74 Light Nut | 23-32 Light Teak | 22-68 Nut | 23-25 Orange | 26-36 Palisander

Granite Finishes

Nero | Impala | Roso Porino | Strzegom

Available Colors

RAL 1015 Beige | RAL 1023 Traffic Yellow | RAL 3020 Traffic Red | RAL 5015 Sky Blue | RAL 6032 Signal Green | RAL 9016 Traffic White | RAL9005 Jet Black | RAL 9006 White Aluminium | RAL 1018 Zinc Yellow | RAL 1036 Pearl Gold | RAL 2004 Pure Orange | RAL 3004 Purple Red | RAL 4010 Telemagena | RAL 5002 Ultramarine Blue | RAL 6018 Yellow Green | RAL 7016 Anthracite Grey | RAL 7022 Umbra Grey | RAL 7035 Light Grey | RAL 8016 Mahogany Brown | RAL 9010 Pure White Structural

MADE IN EUROPE

154 Norfinch Dr, Unit 5 - 6, North York, Ont, M3N 1X6 | TEL: 416-665-0095 | TOLL FREE: 877-265-0095
info@frosttechrefrigeration.com www.frosttechrefrigeration.com

Intertek